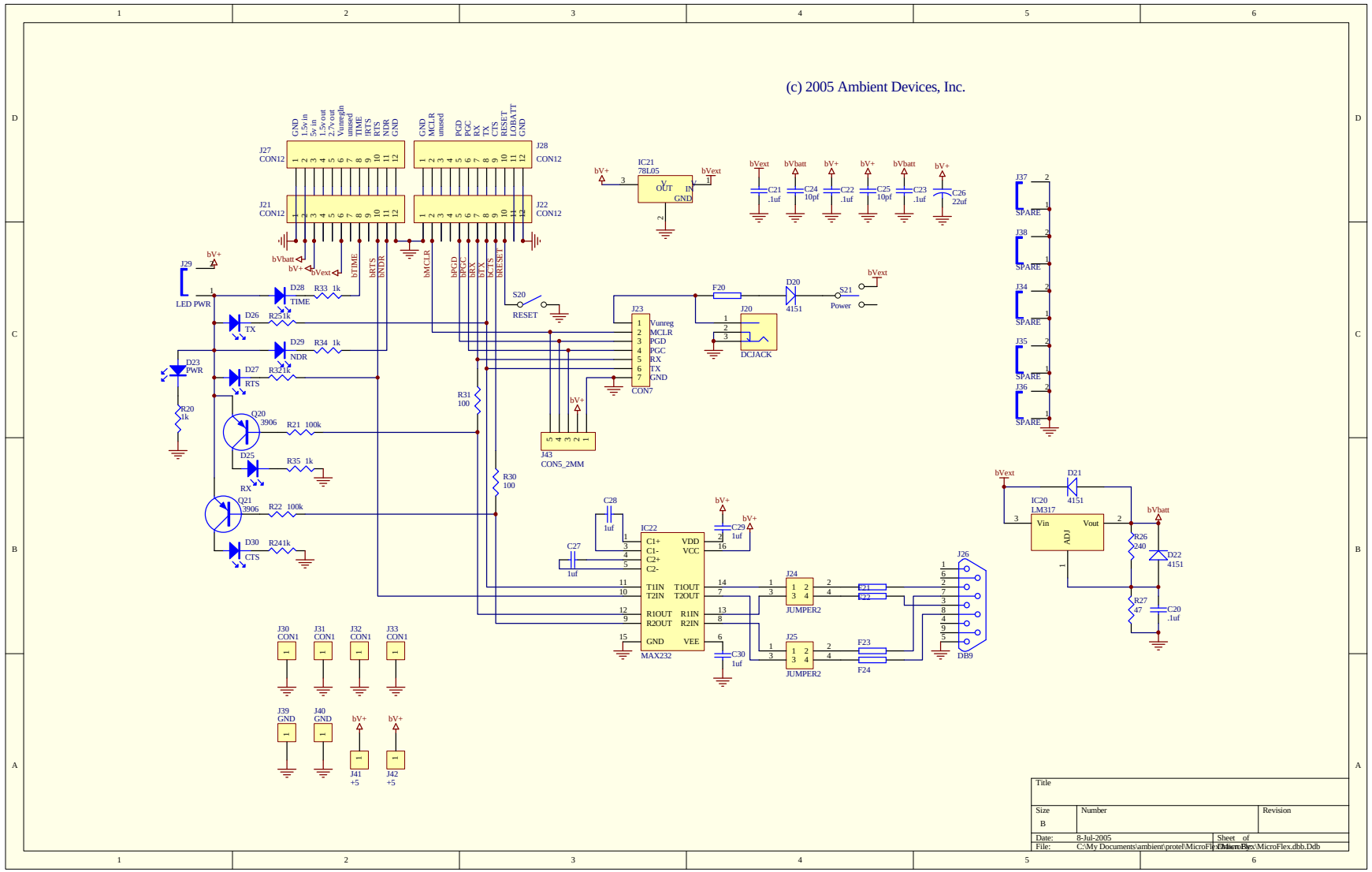
(c) 2005 Ambient Devices, Inc.
J27 CON12
J28 CON12
J21 CON12
J22 CON12
GND 1.5v in 5v in 1.5v out 2.7v out Vunregdh unused TIME IRTS RTS NDR GND
GND MCLR unused PGD PGC RX TX CTS RESET LOBATT GND
IC21 78L05
OUT IN GND
C21 .1uf
C24 10pf
C22 .1uf
C25 10pf
C23 .1uf
C26 22uf
J37 SPARE
J38 SPARE
J34 SPARE
J35 SPARE
J36 SPARE
J29 LED PWR
D28 TIME
R33 1k
D26 TX
R25 1k
D29 NDR
R34 1k
D27 RTS
R32 1k
D23 PWR
R20 1k
Q20 3906
R21 100k
D25 RX
R35 1k
Q21 3906
R22 100k
D30 CTS
R24 1k
S20 RESET
S21 Power
F20
D20 4151
J20 DCJACK
J23 CON7
Vunreg MCLR PGD PGC RX TX GND
J43 CON5_2MM
R31 100
R30 100
C28 1uf
C27 1uf
IC22 MAX232
C1+ C1- C2+ C2- VDD VCC T1IN T2IN T1OUT T2OUT R1OUT R2OUT R1IN R2IN GND VEE
C29 1uf
C30 1uf
J24 JUMPER2
J25 JUMPER2
F21
F22
F23
F24
J26 DB9
IC20 LM317
Vin Vout ADJ
D21 4151
R26 240
D22 4151
R27 47
C20 .1uf
J30 CON1
J31 CON1
J32 CON1
J33 CON1
J39 GND
J40 GND
J41 +5
J42 +5
bV+
bVext
bVbatt
bTIME
bRTS
bNDR
bMCLR
bPGD
bPGC
bRX
bTX
bCTS
bRESET
Title
Size B
Number
Revision
Date: 8-Jul-2005
Sheet of
File: C:\My Documents\ambient\protel\MicroFlex\MicroFlex.dbb.Ddb